GET DELICIOUSLY PURE WATER

The AQ-RO series of reverse osmosis systems are designed to deliver the high quality water by reducing a wide spectrum of contaminants, keeping your hot water equipment clean and impoving your deverage quality.

The AQ-RO reduces contaminants from the incoming water supply, the AQ-RO is the perfect solution for applications that require a low total dissolved solids. AQ-RO reverse osmosis series are compact, wall mounted systems that can provide up to 600 gallons of water per day. These systems produce water that is equal to the quality you would expect from bottled water, in a package that is as reliable as it is convenient.

Model: AQ-RO-400 International Reverse Osmosis System

High Quality Water
Three-stage treatment process improves the quality of your water.

Digital Display
Color display panel with system status, operation, and TDS readings for inlet and product water.

Fast Flash Feature
Improve membrane performace and water quality.

International AQ Reverse Osmosis System | AQ-RO-400

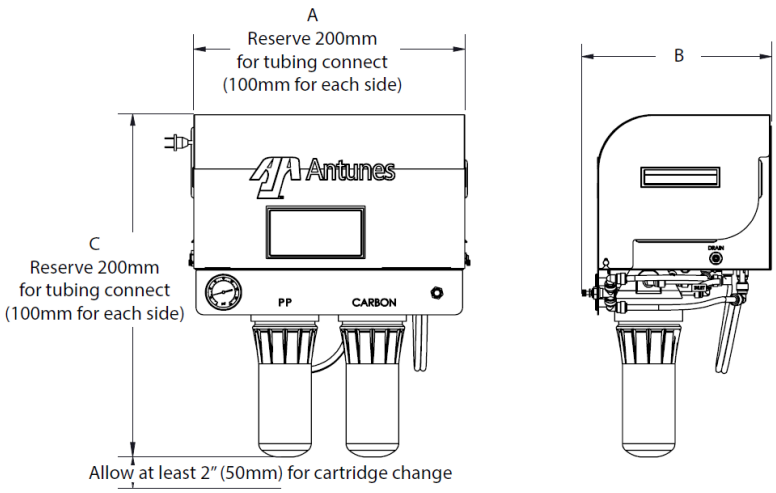

Features:

- Optional disinfecting UV lamp for bacterial reduction
- Color display panel with system status, operation, and TDS readings for inlet and product water
- Adjustable blend valve allows for fine-tuning of the product water TDS
- Fast flush feature improves membrane performace and product water quality.

International AQ Reverse Osmosis System

RO System Information

Model Mfg. No.	Width (A)	Depth (B)	Hight (C)	Nominal Flow Rate	Inlet	Outlet	Drain	Voltage	Power	Current	Operation Temperature	Miniumum Operation Pressure	Design Features Weight
AQ-RO-400 9710141	27" (686 mm)	12" (305 mm)	24" (610 mm)	400 gpm/1 LPM	3/8" (9.53 mm) Tube	1/4" (6.35 mm) Tube	1/4" (6.35 mm) Tube	220VAC 50Hz	110W	0.5A	5-38 °C	10 PSI	Front panel controller TDS monitor Inlet low pressure sensor Outlet high pressure sensor Fast flush option Blend valve for adjustable TDS

Dimensions are for item without shipping box. Shipping weight includes item and shipping box.

RO Memberance Information

Model	Brand	Quantity	Working Pressure	TDS Reduction Rating	Lifespan
DOW'S TAPTECT	1 EA	TT-3012-400	70-80 PSI	96%	24 months

PP Filter Information

Quantity	Size	Norminal Pore Size	Lifespan
1 EA	10" (254 mm)	10 microns	6 months

Carbon Filter Information

Quantity	Size	Norminal Pore Size	Lifespan
1 EA	10" (254 mm)	5 microns	6 months

Antunes delivers a complete range of countertop cooking equipment, water treatment, digital, and automation solutions to foodservice operations around the world. Learn more at antunes.com.

CORPORATE HEADQUARTERS
Carol Stream, Illinois, USA
Phone: +1.630.784.1000
Toll Free: +1.800.253.2991

CHINA FACILITY
Suzhou, China
Phone: +84.512.6841.3637
Fax: +86.512.6841.3907

INDIA FACILITY
57-58 Thattankulam Rd.,
Lotus Colony, J Garden
Madhavaram, Chennai, India 600060