PERFECTLY TOASTED BUNS

The Vertical Contact Toaster (VCTM-2) is used in the largest and most successful foodservice operations around the world, giving buns a consistent, golden-brown finish that helps burgers taste better, look better, and feel hotter when in the hands of the customers.

With its small footprint, the VCTM-2 is a perfect fit for any operation where high-quality bun toasting is the objective. The VCTM-2 also features a variable speed motor that provides operations with flexibility for future menu items and allows for light/dark adjustments. It toasts two buns simultaneously and features an individual heel and crown compression knobs that allow operations to easily adjust toast quality. With a smaller footprint than the standard Vertical Contact Toaster, the VCTM-2 is a perfect fit for any operation where space is limited.

VCTM-2 Vertical Contact Toaster

On-demand Results
Forget batch toasting. Toast buns as needed and serve sandwiches fresh without causing any delays.

Adjustable Quality
Compression settings and platen temperatures are easily adjustable. Every bun can have a golden-brown finish without being flattened or marked.

Small Footprint
The upright design saves valuable counterspace, allowing it to easily integrate into any operation.

Vertical Contact Toaster | VCTM-2

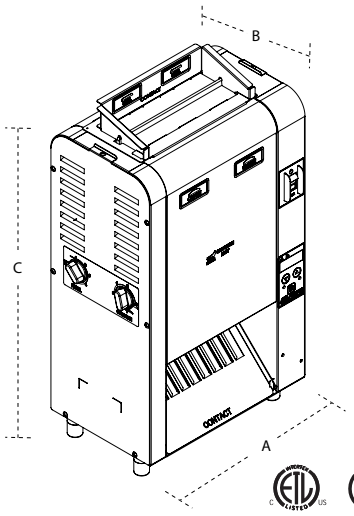

Features:

- Toasts two complete buns simultaneously for increased capacity.
- Variable speed motor provides operations with flexibility for future menu items and allows for light/ dark adjustments.
- Compact footprint is approximately 30% smaller than the VCT-2000.
- Available with mechanical butter wheel to give buns a flavorful toast.
- Available with an auxiliary heater that warms all sides of buns.
- Individual heel and crown compression.
- Digital controller to adjust temperature.

Model & Mfg. No.	Capacity	Approvals	Auxiliary Heater	Plug	Electrical Ratings: Volts	Watts	Amps	Hz.	Dimensions and Weight: Width	Depth	Height	Shipping Weight
VCTM-2 (with belt wraps)												
VCTM-2 9210983	Variable Speed Motor		No	BS-1363	208-230	2100	10.1-9.1	50/60	14" (356 mm)	10 1/2" (268 mm)	25 1/2" (648 mm)	67 lbs. (30.4 kg)
VCTM-2 (without belt wraps)												
VCTM-2 9210959	Variable Speed Motor		No	IEC-309	208-230	2100	10.1-9.1	50/60	14" (356 mm)	10 1/2" (268 mm)	25 1/2" (648 mm)	67 lbs. (30.4 kg)
VCTM-2 9210960	Variable Speed Motor		No	NEMA 6-20P	208-230	2100	10.1-9.1	50/60	14" (356 mm)	10 1/2" (268 mm)	25 1/2" (648 mm)	67 lbs. (30.4 kg)
VCTM-2 with Auxiliary Heater												
VCTM-2 9210916	Variable Speed Motor		Yes	IEC-309	208-230	3100	14.9-13.5	50/60	14" (356 mm)	10 1/2" (268 mm)	25 1/2" (648 mm)	67 lbs. (30.4 kg)
VCTM-2 9210929	Variable Speed Motor		Yes	NEMA 6-20P	208-230	3100	14.9-13.5	50/60	14" (356 mm)	10 1/2" (268 mm)	25 1/2" (648 mm)	67 lbs. (30.4 kg)
VCTM-2 with Auxiliary Heater and Butter Wheel												
VCTM-2 9210913	Variable Speed Motor		Yes	NEMA 6-20P	208-230	3100	14.9-13.5	50/60	15 1/4" (387 mm)	14 3/4" (375 mm)	25 1/2" (648 mm)	70 lbs. (31.8 kg)
VCTM-2 9210914	Variable Speed Motor		Yes	IEC-309	208-230	3100	14.9-13.5	50/60	15 1/4" (387 mm)	14 3/4" (375 mm))	25 1/2" (648 mm)	70 lbs. (31.8 kg)

Dimensions are for item without shipping box. Shipping weight includes item and shipping box. Items highlighted in blue are for international markets.

Size Comparison

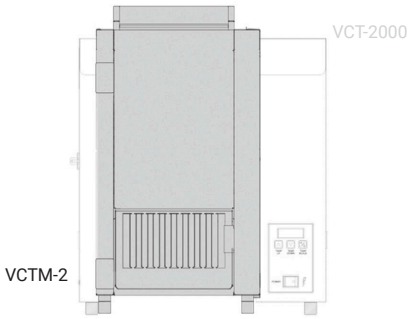

Antunes delivers a complete range of countertop cooking equipment, water treatment, digital, and automation solutions to foodservice operations around the world. Learn more at **antunes.com**.

CORPORATE HEADQUARTERS
Carol Stream, Illinois, USA
Phone: +1.630.784.1000
Toll Free: +1.800.253.2991

CHINA FACILITY
Suzhou, China
Phone: +84.512.6841.3637
Fax: +86.512.6841.3907

INDIA FACILITY
57-58 Thattankulam Rd.,
Lotus Colony, J Garden
Madhavaram, Chennai, India 600060